Operation and Maintenance of Tipping Bucket Rain Gauges and Compact Weather Stations

Wet Tropics Major Integrated Project Standard Operating Procedure WTMIP SOP 013

Version 1.0

Wet Tropics Major Integrated Project

1 July 2021

Table of Contents

WTMIP SOP 013: Operation and Maintenance of Tipping Bucket Rain Gauges and Compact Weather Stations

1. Purpose and scope

This document provides guidance on the process of collecting high-frequency meteorological data as part of the Wet Tropics Major Integrated Project (WTMIP).

The method outlined in this document applies to maintain, collect and quality control data from tipping bucket rain gauges (various models) and MaxiMet and Vaisala compact weather stations.

2. Training, competency and responsibilities

Program staff, contract staff, landholders and external stakeholders participating in meteorological measurements are provided with training in measurement methods. Records of participant competency are maintained within the Terrain Natural Resource Management (NRM) file management system (SharePoint).

Table 1 Roles and responsibilities of WTMIP program participants

Position	Responsibilities
WTMIP Project Leader	Provide resources for the implementation and continued development of this method.
WTMIP Water Quality Project Officers (Leader/Technicians)	Ensure methods described in this method document are followed. Train new staff members in the methods. Continually review and develop the methods where appropriate.
WTMIP program staff, contract staff, landholders and external stakeholders	Follow the methods described in this document. Provide feedback to WTMIP Water Quality Project Officers for continued development of this method document.

3. Workplace health and safety

Field based work activities must adhere to Terrain NRM work health and safety (WHS) requirements. The following procedures and available equipment must be considered prior to undertaking fieldwork:

- Joint Corporate Nature, Terrain NRM, Cape York NRM and Northern Gulf Resource Management Group Health and Safety Policy and Procedures Manual.
- Terrain NRM Water Quality Monitoring Risk Assessment.
- Trip plan, including call-in schedule and emergency response procedures.
- Communication devices required for the trip (e.g. mobile phone, SPOT GPS device, EPIRB).
- First Aid Kit.
- Personal Protective Equipment, such as safety boots, pants, long sleeved shirt, hat.
- Insect spray for managing wasp or ant infestations on weather stations[1].

[1] Ensure that the insect spray active ingredient is not one of the pesticides being monitoring as part of the water quality monitoring program to avoid possible sample contamination. Store the spray in the Tully and Innisfail offices and collect as required, as opposed to storing in a hot vehicle.

4. Record keeping

For each instrument the following procedures and documents should be established and kept up to date:

- List of spare parts suppliers and service/repair providers.
- Written inspection, maintenance and calibration schedules.
- Maintenance sheet which has a record of inspection, maintenance and repair activities detailing dates and people involved **(Figure 1).**
- Calibration report which has a record of calibration activities detailing dates, times, results, and people involved **(Figure 2).**

Keeping records allows it to be determined whether the equipment has been maintained in a sound operating condition and the recorded data is credible. This information is vital for the defensibility of WTMIP data, when undertaking investigations or if an audit is taking place.

Maintenance sheets and calibration sheets are kept in SharePoint under MIP-Knowledge and info- Data Storage – Local Scale Monitoring.

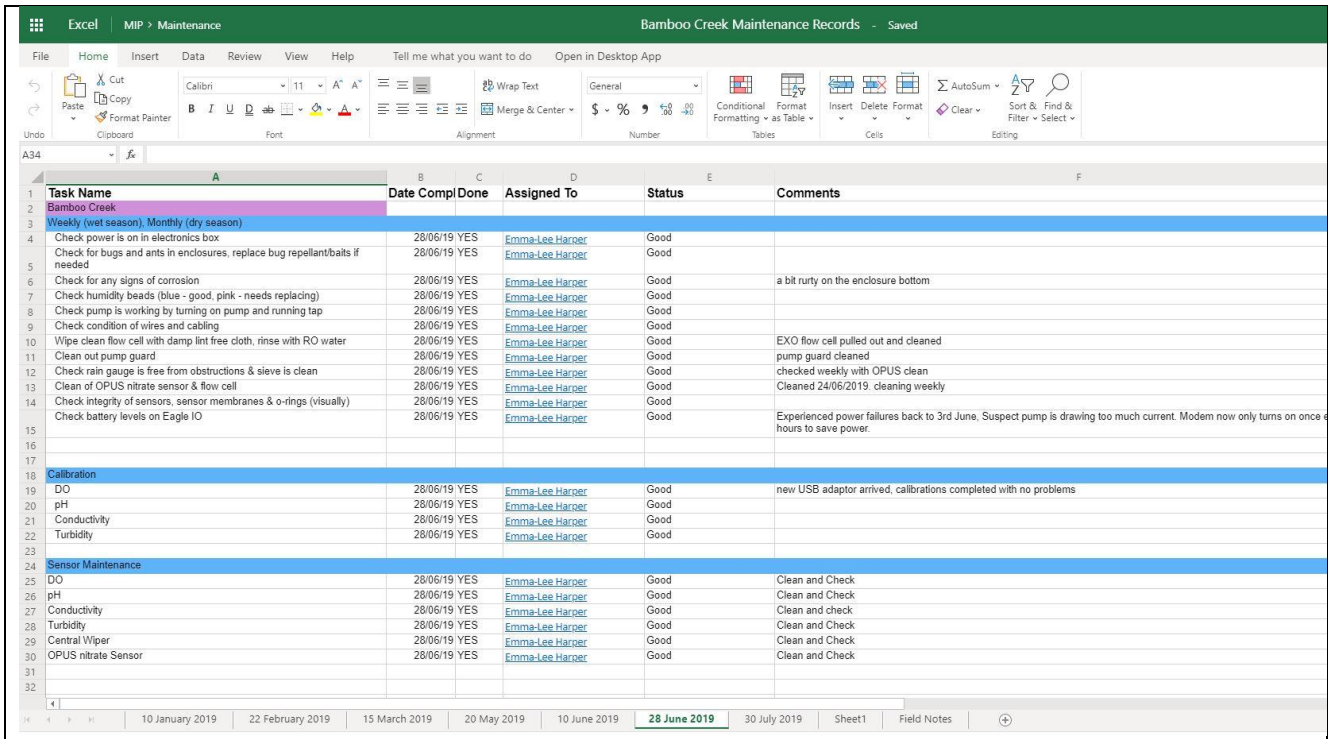

Task Name	Date Compl	Done	Assigned To	Status	Comments
Bamboo Creek					
Weekly (wet season), Monthly (dry season)					
Check power is on in electronics box	28/06/19	YES	Emma-Lee Harper	Good	
Check for bugs and ants in enclosures, replace bug repellant/baits if needed	28/06/19	YES	Emma-Lee Harper	Good	
Check for any signs of corrosion	28/06/19	YES	Emma-Lee Harper	Good	a bit rurty on the enclosure bottom
Check humidity beads (blue - good, pink - needs replacing)	28/06/19	YES	Emma-Lee Harper	Good	
Check pump is working by turning on pump and running tap	28/06/19	YES	Emma-Lee Harper	Good	
Check condition of wires and cabling	28/06/19	YES	Emma-Lee Harper	Good	
Wipe clean flow cell with damp lint free cloth, rinse with RO water	28/06/19	YES	Emma-Lee Harper	Good	EXO flow cell pulled out and cleaned
Clean out pump guard	28/06/19	YES	Emma-Lee Harper	Good	pump guard cleaned
Check rain gauge is free from obstructions & sieve is clean	28/06/19	YES	Emma-Lee Harper	Good	checked weekly with OPUS clean
Clean of OPUS nitrate sensor & flow cell	28/06/19	YES	Emma-Lee Harper	Good	Cleaned 24/06/2019. cleaning weekly
Check integrity of sensors, sensor membranes & o-rings (visually)	28/06/19	YES	Emma-Lee Harper	Good	
Check battery levels on Eagle IO	28/06/19	YES	Emma-Lee Harper	Good	Experienced power failures back to 3rd June, Suspect pump is drawing too much current. Modem now only turns on once e hours to save power.
Calibration					
DO	28/06/19	YES	Emma-Lee Harper	Good	new USB adaptor arrived, calibrations completed with no problems
pH	28/06/19	YES	Emma-Lee Harper	Good	
Conductivity	28/06/19	YES	Emma-Lee Harper	Good	
Turbidity	28/06/19	YES	Emma-Lee Harper	Good	
Sensor Maintenance					
DO	28/06/19	YES	Emma-Lee Harper	Good	Clean and Check
pH	28/06/19	YES	Emma-Lee Harper	Good	Clean and Check
Conductivity	28/06/19	YES	Emma-Lee Harper	Good	Clean and check
Turbidity	28/06/19	YES	Emma-Lee Harper	Good	Clean and Check
Central Wiper	28/06/19	YES	Emma-Lee Harper	Good	Clean and Check
OPUS nitrate Sensor	28/06/19	YES	Emma-Lee Harper	Good	Clean and Check

Figure 1 Example maintenance sheet

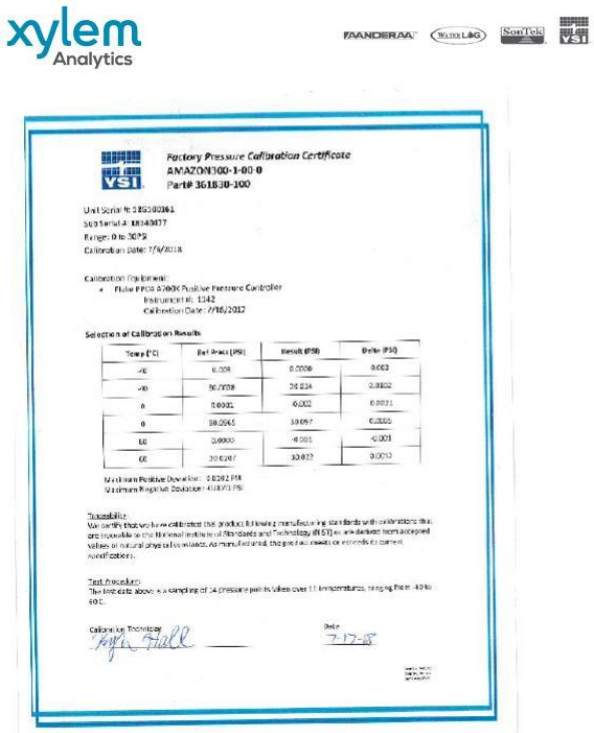
xylem Analytics

Factory Pressure Calibration Certificate
AMAZON300-1-00 0
Part# 361830-100

Selection of Calibration Results

Temp (°C)	Ref Press (PSI)	Result (PSI)	Delta (PSI)
-40	0.000	0.0000	0.003
-20	20.0008	20.024	0.0002
0	0.0001	0.002	0.0021
0	10.0045	10.057	0.0005
60	0.0000	-0.001	-0.001
60	20.0207	20.027	0.0010

Maximum Positive Deviation: 0.0202 PSI
Maximum Negative Deviation: -0.0001 PSI

Traceability:
We certify that we have calibrated this product, following manufacturing standards with calibrations that are traceable to the National Institute of Standards and Technology (NIST) or we derived non-accepted values or natural physical values. As manufactured, the gauge meets or exceeds its current specifications.

Test Procedure:
The test data above is a sampling of 24 pressure points taken over 11 temperatures, ranging from -40 to 60°C.

Calibration Technician: Kyle Hall
Date: 7-17-18

Figure 2 Example calibration report (Xylem, 2018).

5. Tipping bucket rain gauges

Tipping bucket rain gauges are used to monitor local rainfall and are installed at all WTMIP in-stream and paddock Local Scale Monitoring stations. The tipping bucket rain gauges use calibrated volumes of the tipping bucket sensors to calculate rainfall. Each time the tipping mechanism tips, the known calibrated volume from that tip accumulates into total rainfall volume. The H-3401 YSI and Davis tipping bucket rain gauges are programmed to provide data on interval rainfall (individual tips at 0.2 mm), hourly rainfall and daily rainfall totals via telemetry to eagle.io. RainWise tipping rain gauges were also purchased and used for the WTMIP but were prone to blockages and other issues so are not recommended for future use and have thus been removed from this SOP.

Tipping bucket rain gauges may have been factory calibrated to known tipping volumes but should be checked on installation in the field. Further periodic calibrations (e.g. annually) should be undertaken to ensure accurate measurements are being recorded. Proper care and maintenance will ensure inaccuracies due to debris and algae accumulation and/or blockage from animal activity do not occur. Tipping bucket rain gauges should be cleaned at least monthly, or more frequently if required (i.e. during heavy rainfall periods when algae build up is more likely). The installation of bird spikes around the lip of the rain gauge reduces the impact from birds on the cleanliness of the rain gauge.

5.1 H-3401 YSI rain gauge routine maintenance

Figure 3 to Figure 6 shows the H-3401 YSI model tipping bucket rain gauge. Figure 4 shows the tipping bucket rain gauge installed at one of the in-stream monitoring locations. Figure 5 shows the tipping bucket rain gauge rainfall capture funnel with debris guard and Figure 6 shows the inside tipping sensor mechanism. The rain gauge is maintained according to the frequency set out in the LSM maintenance schedule (e.g. monthly).

Follow the stepwise procedure below to conduct a clean of the H-3401 YSI tipping bucket rain gauge.

1. Ensure you have the necessary equipment to clean the tipping bucket rain gauge. You will need a Philips head screwdriver, 2 L of water, a rag or cloth and a ladder.
2. Once on site, assemble the ladder so you have safe access to the rain gauge. Ensure the ladder is level and you can always keep three points of contact on the ladder.

3. Take the Philips head screwdriver and unscrew the three screws at the base of the rain gauges. This will enable you to remove the top funnel covering the internal mechanisms. Carefully bring the funnel down to the ground for cleaning.
4. Taking a cloth and fresh water, clean the interior and exterior of the funnel including the sieve until there is no algae build up or debris present. A toothbrush can be used to remove more persistent soiling. Flush the funnel with water and ensure there is good steady flow of water through the funnel (**Figure 5**).
5. Take a damp cloth and carefully climb the ladder to clean the internal mechanisms. Disconnect one of the two black wires to avoid uploading erroneous data on the data logger (**Figure 6**). Taking the damp cloth, wipe the tipping buckets sensors until they are free from algal build-up.
6. Ensure the bubble sensor is level. If it is not, adjust the level of the internal mechanism by tightening or loosening the fittings of the tipping rain gauge to the monitoring station until the bubble is in the centre position (**Figure 6**).
7. Retrieve the clean funnel and sieve and replace over the internal mechanism of the tipping bucket. Tighten the three screws holding the funnel in place, using the Philips head screwdriver until secure. Be sure to re-connect the rain gauge to the data logger by re-inserting the black wire.
8. Record the date and time of maintenance in the relevant maintenance sheet for that site location.
9. Adjust quality coding for any tips occurred by the tipping mechanism during the clean in eagle.io (only required if the black wires were not disconnected as described in step 5 above; see **WTMIP SOP 014: Management of telemetered water quality data in eagle.io** for quality coding method).

Figure 3 H-3401 Tipping bucket rain gauge (Xylem, 2018b)

Figure 4 Tipping bucket rain gauge installed at WTMIP in-stream monitoring location

Figure 5 H-3401 tipping bucket rain gauge view from the top into rainfall capture funnel (Xylem, 2018b)

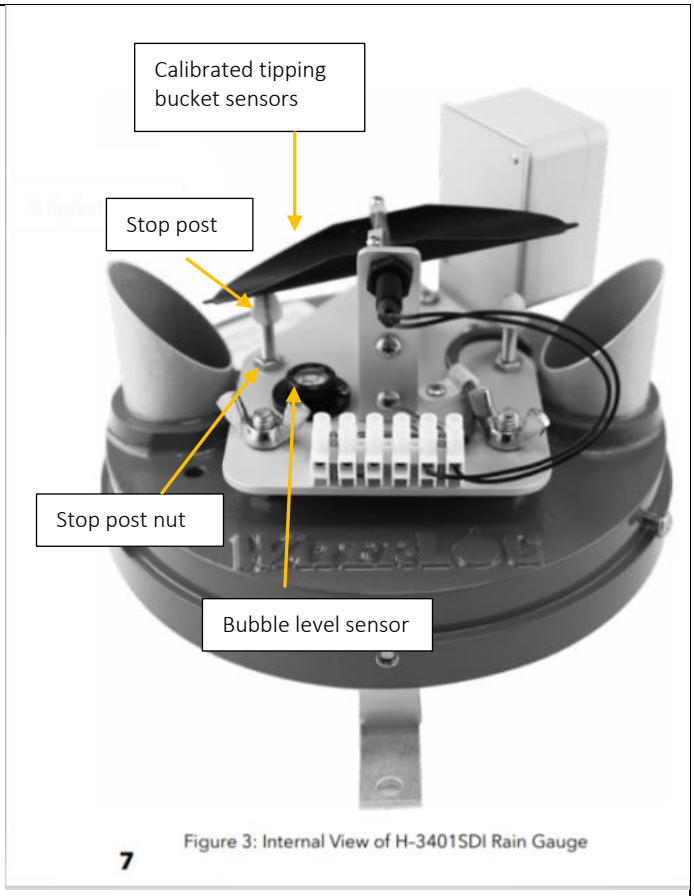

Figure 6 H-3401 tipping bucket rain gauge internal mechanisms (Xylem, 2019)

5.3 Davis tipping bucket rain gauge routine maintenance

The Davis model tipping bucket rain gauges were purchased for installation at WTMIP Catchment Repair core sites.

Follow the stepwise procedure below to conduct a clean of the Davis tipping bucket rain gauge.

1. Ensure you have the necessary equipment to conduct a clean of the tipping bucket rain gauge. You will need dry hands, 2 L of water, a rag or cloth, pest control spray.
2. Unscrew the catching cone from base of the rain gauges by holding the finger grips and turning in an anti-clockwise direction (**Figure 8**). This will enable you to remove the cone covering the internal mechanisms. Carefully bring the funnel down to the ground for cleaning.
3. Taking a cloth and fresh water, clean the interior and exterior of the funnel including the sieve until there is no algae build up or debris present. A toothbrush can be used to remove more persistent soiling. Flush the funnel with water and ensure there is good steady flow of water through the cone.
4. Take a damp cloth and carefully clean the internal mechanisms (**Figure 7**). Wipe the tipping bucket's sensors until they are free from algae build-up. Take care not to tip the sensors. If sensors are tipped, note the time, date and number of tips so the data can be flagged appropriately dealt with appropriately.
5. Ensure the bubble sensor is level. If it is not, adjust the level of the rain gauge until the bubble is in the centre position by adjusting the bracket mounted to the control box.
6. Retrieve the clean funnel and sieve and replace over the internal mechanism of the tipping bucket. Align the lugs on the cone then seat the cone and turn in a clockwise direction to fasten.
7. Unlock control box, inspect components to ensure correct function and the modem function lights are illuminating. Remove any pests or accumulation of debris from pests. If pests are present, lightly apply pest control spray as directed by manufacturer and leave to air. Once air dried, close the control box.
8. Record date and time of maintenance in the relevant maintenance sheet for that site location.
9. Adjust quality coding for any tips occurred by the tipping mechanism during the clean in eagle.io (see ***WTMIP SOP 014: Management of telemetered water quality data in eagle.io*** for downloading and quality coding method).

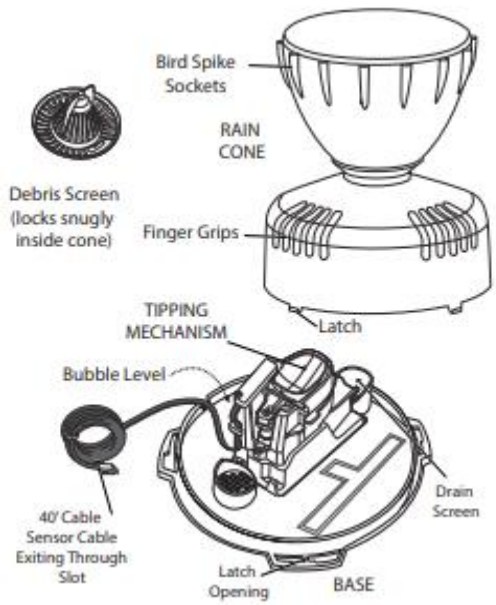

Figure 7 Davis tipping bucket rain gauge (Davis Instruments, 2009)

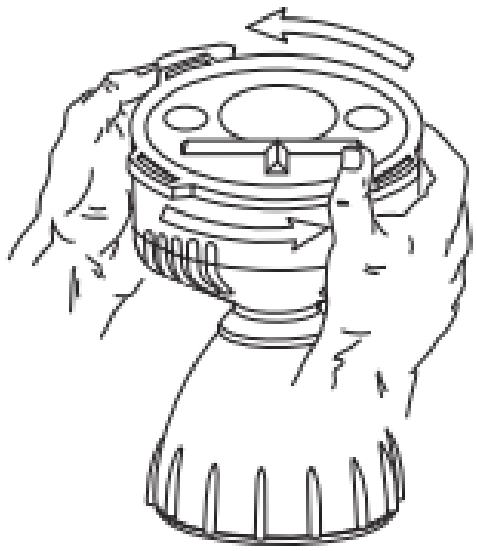

Figure 8 Preparing gauge by removing cone, twist in anti-clockwise direction to loosen cone when in upright position (Davis Instruments, 2009).

5.4 Rain gauge calibration and adjustment

Tipping rain gauges used in the WTMIP are calibrated at least annually, in the lead-up to the wet season (generally late September-early October) and at any other time when there are any concerns about the data being generated. The calibration may be conducted by an external service provider (e.g. Xylem, for the in-stream monitoring stations) or by the WTMIP delivery team.

Rain gauge calibration checks and subsequent adjustments should only be attempted on days where no rain is predicted (or looking imminent) so the procedure does not interrupt regular rainfall measurements. Only undertake the checks on a calm day as gusts of wind will interfere with the calibration procedure.

Volume test

Before commencing a volume test, make sure the bucket stop post nuts are tight (Figure 6). These have been carefully adjusted at the factory and should not have come loose. If they are tight, then do not loosen or adjust them until after the rain gauge has been tested. If they are loose then re-tighten them.

A Field Calibration Device (FCD; Figure 9) is used to check the calibration of tipping bucket rain gauges in the field. The advantage of using a FCD is that the tipping bucket rain gauges can remain fixed in their location (rather than being transported to the laboratory) and are therefore only out of service for a very short period.

The FCD comes with a 100 mm/hr nozzle Figure 10 as standard. However, extra nozzles can be purchased for 50, 200, 300 and 500 mm/hr.

Figure 9 Rain gauge field calibration device (FCD)

Figure 10 100 mm/h nozzle for rain gauge field calibration device (FCD)

The FCD is used to check whether a rain gauge is providing accurate readings when a certain volume of water is discharged into the rain gauge collector. Therefore, prior to undertaking the volume test, the rain gauge should be cleaned and maintained as detailed in Section 5.1 and Section 5.2. Should the impacts of a dirty rain gauge on rainfall measurements be of interest, then the volume test can be undertaken both before and after the cleaning procedure.

Use the FCD to undertake the volume test as follows:

1. The FCD nozzle is unscrewed from the cylinder Figure 11, which in turn is *completely* filled with reverse osmosis (RO) water Figure 12. If RO water is unavailable, store-bought distilled water can also be used.
2. The nozzle is then screwed back on the cylinder Figure 11 and placed through the holding plate which sits on the catch of any 200 or 203 mm tipping bucket rain gauge (see Figure 13). ***Note: It is important to wet the rain gauge funnel before performing the calibration as it will increase the accuracy of the calibration results. This can be done by running 50 mL through the rain gauge before commencing the volume test.***
3. The FCD is fitted to the rain gauge bucket as shown in Figure 13 and Figure 14).
4. The valve is opened as shown in Figure 15 and a pre-set volume of water (653 mL) will discharge through the tipping bucket rain gauge.

5. The number of tips can be manually counted or stored on the data logger for calibration check evidence. Those data will also be logged and uploaded on eagle.io so do not forget to code the data as 'Bad' data on eagle.io once the check is completed.
6. Repeat **Step 1** to **Step 5** at least a second time, until similar results are recorded on each attempt.

Figure 11 Nozzle unscrewed from the cylinder

Figure 12 Filling the cylinder to the very top with RO Water

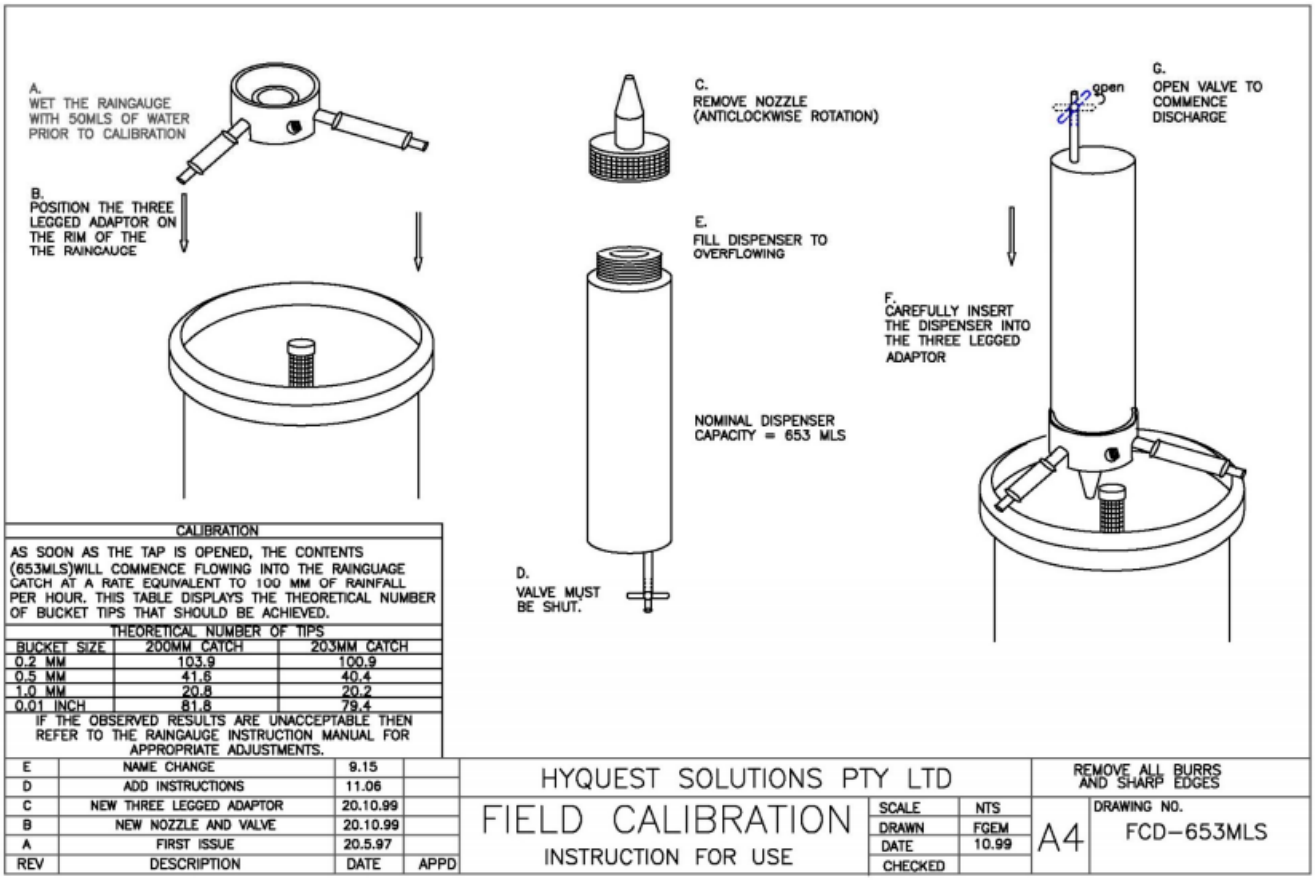

Figure 13 Schematic instructions for use of the 653 mL Field Calibration Device (FCD) (Source: HyQuest (2017))

	
Figure 14 The field calibration device once fitted to the tipping bucket rain gauge	**Figure 15** Open valve to commence discharge

7. The accuracy of the rain gauge is determined by first converting the volume passing through the rain gauge to mm of rainfall and then calculating the percent error relative to the expected rainfall measurement using the formulas below.

Formula 1

Calculate the volume in millimetres (mm) equivalent to the volume in millilitres (mL), that has passed through the rain gauge funnel.

$$Vol(mm) = Vol(mL) \times 0.03836$$

Note that the above formula is based on the specific rain gauge model, in this case the YSI H3401 (Xylem 2014).

Formula 2

Verify the percent error is less than 3%.[2]

$$\%\ Error = \frac{VolMeas - VolFCD}{VolMeas} \times 100$$

Where:
VolMeas = the volume (in mm) that has been recorded by the rain gauge (i.e. based on the number of tips)
VolFCD = the volume (in mm) that was passed through the rain gauge during the check

If the percent error exceeds 3%, the stop bars of the rain gauge will need to be adjusted so they tip after receiving a lower or higher volume of water (see methods outlined below, specific to each rain gauge model). A balance test should be conducted first to determine which side of the tipper requires adjustment or if both stop posts require equal adjustment.

Balance test

To conduct a balance test, first connect the supplied hose to the barbed fittings on the bottom of the rain gauge, and then run each hose into a separate graduated cylinder. Be sure the cylinders are empty and dry before starting the test.

Steps to perform the balance test:

1. Make sure the hoses are connected and running into separate 200 mL graduated cylinders.

[2] The acceptable margin of error is based on the recommended percent error provided in the YSI H3401 start up guide (Xylem 2014).

2. Add 200 mL to the FCD and insert the FCD upside down into the rain gauge bucket (see **Figure 13**).
3. Pour approximately 200 mL of water into the bottle and let it run through the rain gauge. The exact amount of water is not important at this step because it is the rain gauge bucket's balance (side-to-side) being checked, not the actual rainfall measurement accuracy.
4. Let all the water run through the bottle and rain gauge, then carefully remove the white housing and tip the bucket once more to allow all the water to run out.
5. Carefully check the amount of water in each of the graduated cylinders. They should have the same amount of water in each cylinder (within 5% of each other (Xylem 2014)).

Adjusting the tipping rain gauges

Tipping rain gauges only require adjustment when the result of the volume test indicates that the gauge is not measuring rainfall accurately (i.e. when the percent error from the known test volume is greater than 3% (Xylem 2014)). Adjusting the tipping mechanism consists of adjusting the stop posts to reduce or increase the volume of water the bucket can hold before it tips. As the stop post rises, the volume of water in the bucket on the opposite side decreases. A balance test should be undertaken to establish which side of the tipper bucket requires stop post adjustment, or if both sides require equal adjustment.

Once the adjustments have been made, a volume test should be undertaken to check if the rain gauge accuracy has returned to within the acceptable margin of error (±3%).

H-3401 YSI

- If the gauge reads high (i.e. too many tips for the volume passed through), lower the post to decrease the tip speed (1/4 to 1/2 a turn ***clockwise*** at a time is recommended). Re-lock the nut.
- If the gauge reads low (insufficient tips for the volume passed through), raise the post to increase tip speed (1/4 to 1/2 a turn ***counter clockwise*** at a time is recommended). Re-lock the nut.
- If the balance test indicated that both sides of the bucket require equal adjustment, then use a pipette to put a set amount of water into each bucket ensuring the bucket tips with a specific volume of water in the bucket. Adjust the stop post heights to ensure the buckets tip at the required volume of water.

If you are not comfortable making these adjustments, request assistance from Xylem Analytics service staff or return to the factory for calibration.

Davis tipping bucket

To adjust the rain gauge, use a 5 mm (3/16) wrench to rotate the calibration screws located underneath the tipping spoons (see **Figure 16** and **Figure 17**). Do not touch the read switch in the centre of the buckets.

The metric version is calibrated at the factory so the spoons tip for each 0.2 mm of rain. To adjust the calibration slightly, use a 5 mm wrench to rotate the adjustment screws which are located underneath the tipping spoons (**Figure 16**). The adjustment guide embossed in the platform shows how far you must rotate both screws in turn to effect a 1% and a 2% change. Moving the screws in the positive (+) direction causes the spoons to tip more times (i.e. give a larger count) for a given amount of water.

The adjustment guide in the platform shows how far you must rotate both screws in turn to effect a 1% and a 2% change.

- To adjust for too many tips (need more rainfall volume), lower the stop post on the opposite side of the bucket that is tipping too early (see **Figure 16**).
- To adjust for too few tips (need less rainfall volume), raise the stop post on the opposite side of the bucket that is tipping too late.
- To adjust for equal amounts of water in each bucket, use a pipette to put a set amount of water into each bucket ensuring the bucket tips with a specific volume of water in the bucket. Adjust the stop post heights to ensure the buckets tip at the proper volume of water.

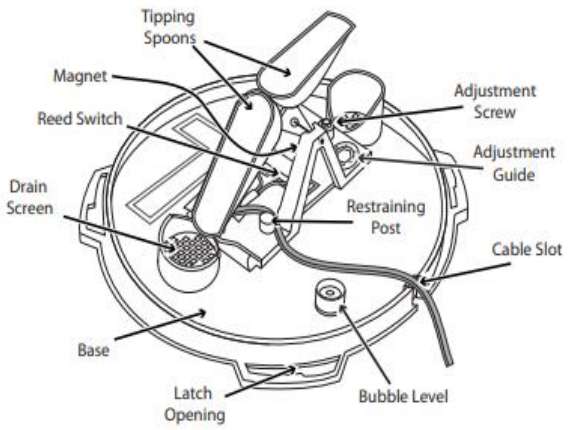

Figure 16 Davis tipping bucket

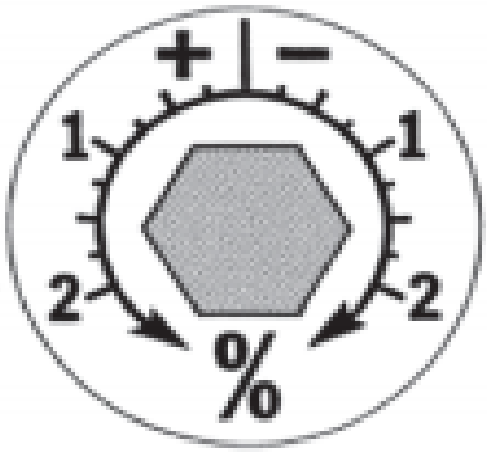

Figure 17 Adjustment screw + - used to increase or decrease volume

6. MaxiMet compact weather station

MaxiMet compact weather stations are designed by Gill Instruments to measure meteorological parameters in one compact unit. The WTMIP use GMX500 MaxiMet compact weather stations which are located at all Local Scale Monitoring in-stream and paddock monitoring stations and are programmed to upload data via telemetry to eagle.io. Parameters include humidity, wind speed, wind direction, air temperature and barometric pressure.
Figure 18 shows a close-up of the MaxiMet compact weather station and Figure 19 shows the MaxiMet compact weather station installed at an in-stream monitoring location.

Figure 18 Close up of the GMX500 MaxiMet compact weather station (MaxiMet, 2016)

Figure 19 GMX500 MaxiMet compact weather station installed at an in-stream monitoring site

6.1 Maintenance

The MaxiMet compact weather stations have no moving parts or user-serviceable parts in the weather station and as a result require very little maintenance. To ensure continued sensor accuracy it is important that the weather station is as level as possible and free from algal build up.

Follow the stepwise procedure below to conduct a general clean of the station.

1. Ensure you have the necessary equipment to conduct a clean of the MaxiMet compact weather station. You will need a small level, 2 L of water, a rag or cloth and a ladder.
2. Once on site assemble the ladder so you have safe access to the sensor. Ensure the ladder is level and you can always keep three points of contact on the ladder.
3. Taking a cloth and fresh water, clean the exterior of the weather station, removing any algal build-up or debris present. Take care not to scratch any part of the weather station or leave any greasy build-up. Flush the weather station with water if needed.

4. Ensure the station is as level as possible by placing a small level vertically on the holding bracket. The level bubbles should all sit in the centre. If needed, adjust the holding bracket by carefully tapping to the left or right to achieve a level position.
5. Record date and time of maintenance in the relevant maintenance sheet for that site location.

7. Vaisala weather transmitter

Vaisala weather transmitters are designed to measure meteorological parameters in one compact unit. The WTMIP use WXT536 Vaisala weather transmitter which are located at all paddock monitoring stations and are programmed to upload data via telemetry to eagle.io. Parameters include humidity, wind speed, wind direction, air temperature and barometric pressure.

Figure 20 shows a close-up of the Vaisala weather transmitter station and Figure 21 shows the Vaisala weather transmitter installed at a paddock monitoring location.

Figure 20 Close up of the WXT536 Vaisala weather transmitter (Vaisala)

Figure 21 WXT536 Vaisala weather transmitter at a paddock monitoring site

7.1 Maintenance

The Vaisala weather transmitter has no moving parts or user-serviceable parts in the weather station and as a result requires very little maintenance. To ensure continued sensor accuracy it is important that the weather station is as level as possible and free from algal build-up.

Follow the stepwise procedure below to conduct a general clean of the station.

1. Ensure you have the necessary equipment to conduct a clean of the Vaisala weather transmitter You will need a small level, 2 L of water, a rag or cloth and a ladder.
2. Once on site assemble the ladder so you have safe access to the sensor. Ensure the ladder is level and you can always keep three points of contact on the ladder.
3. Taking a cloth and fresh water, clean the exterior of the weather transmitter, removing any algal build-up or debris present. Take care not to scratch any part of the weather transmitter or leave any greasy build-up. Flush the weather station with water if needed.

4. Ensure the station is as level as possible by placing a small level vertically on the holding bracket. The level bubbles should all sit in the centre. If needed, adjust the holding bracket by carefully tapping to the left or right to achieve a level position.

5. Record date and time of maintenance in the relevant maintenance sheet for that site location.

References

Davis Instruments 2019. User Manual Rain Collector – Product Number 6464 and 6464M Rev.A

HyQuest (2017). Instruction Manual: Field Calibration Device, Models FCD-653, FCD-314 and FCD-730, Issue 3, 9 February 2017.

Maximet 2016. MaxiMet compact weather station user manual. Doc No:1957-PS-001 Issue 6.

WTMIP 2021. WTMIP SOP 014: Management of telemetered water quality data in eagle.io.

WTMIP 2020 (in prep). WTMIP SOP 017: Operation of RainLog 2.0 data logger and RL-Loader Software

Xylem 2014. H3401 SDI Rain Gauge Getting Started Guide. February 2014 Rev C.

Xylem 2018a. Xylem Analytics install report, provided to Terrain NRM November 2018.

Xylem 2018b. Model H-3401 Tipping bucket rain gauge product brochure.

Version Control

Document History	Date	Amendment:	Amended by:	Reviewed by:	Approved by:
Version 1.0	01/07/2021	SOP prepared from reference documents cited in above document.	Emma-Lee Harper, Chris Algar, Romain Kobel and Alicia Buckle (Terrain NRM)	Alicia Buckle and Romain Kobel (Terrain NRM) Tony Webster (Research Agronomist, CSIRO)	Fiona George (Terrain NRM)

Terrain NRM and WTMIP partner organisations acknowledge the Water Quality and Investigations team at Queensland Government Department of Environment and Science for providing SOPs from the Great Barrier Reef Catchment Loads Monitoring Program as model documents for the development of WTMIP SOPs.